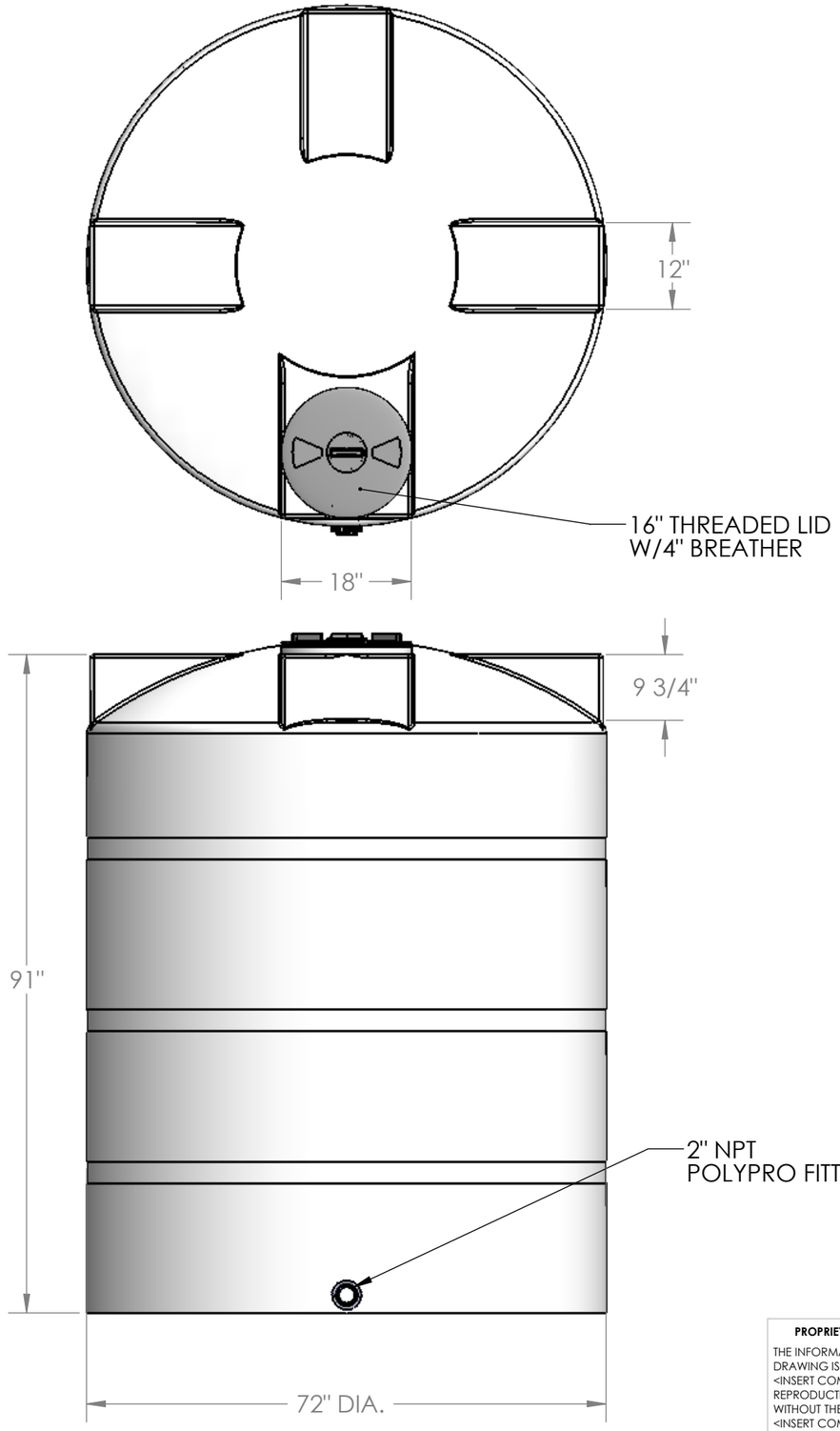

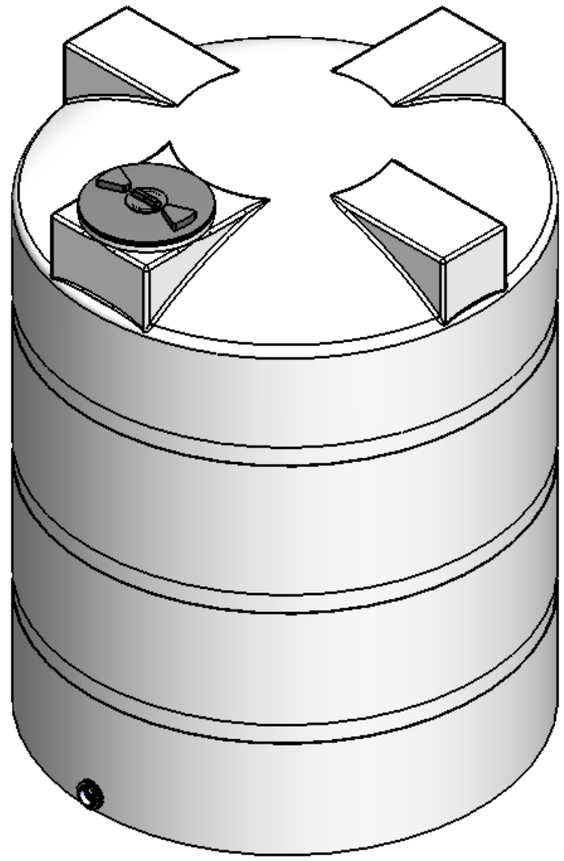

NOTES:

1. MATRIAL: HDPE
2. WEIGHT: 290 LBS STD. RATED 1.5 S.G.
   383 LBS HD. RATED 2.0 S.G.

PROPRIETARY AND CONFIDENTIAL

THE INFORMATION CONTAINED IN THIS DRAWING IS THE SOLE PROPERTY OF <INSERT COMPANY NAME HERE>. ANY REPRODUCTION IN PART OR AS A WHOLE WITHOUT THE WRITTEN PERMISSION OF <INSERT COMPANY NAME HERE> IS PROHIBITED.

NEXT ASSY	USED ON
APPLICATION	

UNLESS OTHERWISE SPECIFIED:

DIMENSIONS ARE IN INCHES
TOLERANCES:
FRACTIONAL ±
ANGULAR: MACH ± BEND ±
TWO PLACE DECIMAL ±
THREE PLACE DECIMAL ±

INTERPRET GEOMETRIC TOLERANCING PER:

MATERIAL

FINISH

DO NOT SCALE DRAWING

	NAME	DATE
DRAWN	EBW	8-24-09
CHECKED		
ENG APPR.		
MFG APPR.		
Q.A.		

COMMENTS:

GoTo TANKS.com 877-468-2657

TITLE: 1500 GALLON VERTICAL TANK

SIZE	DWG. NO.	REV
B	1500 VT	

SCALE: 1:50 WEIGHT: SHEET 1 OF 1