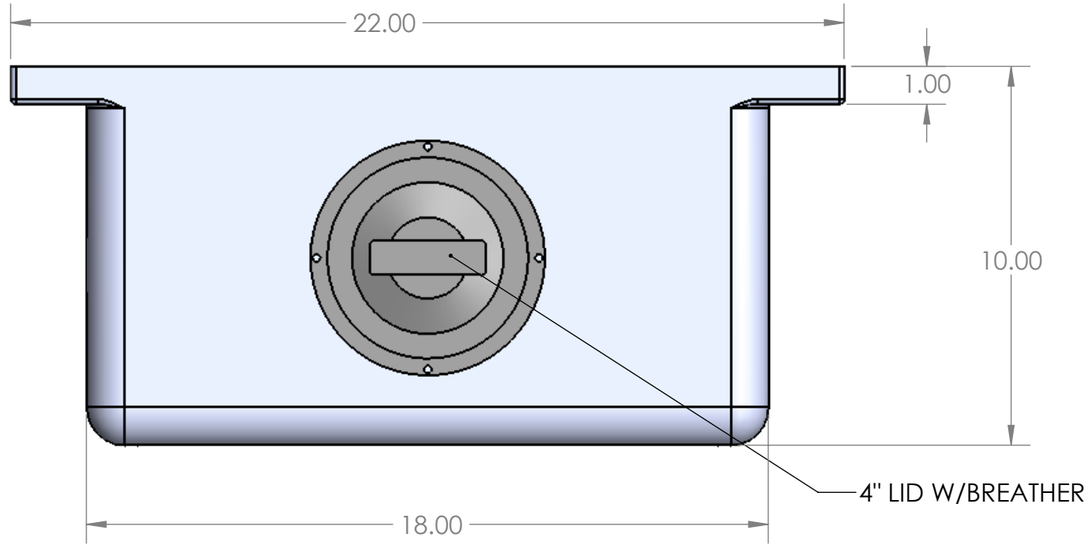

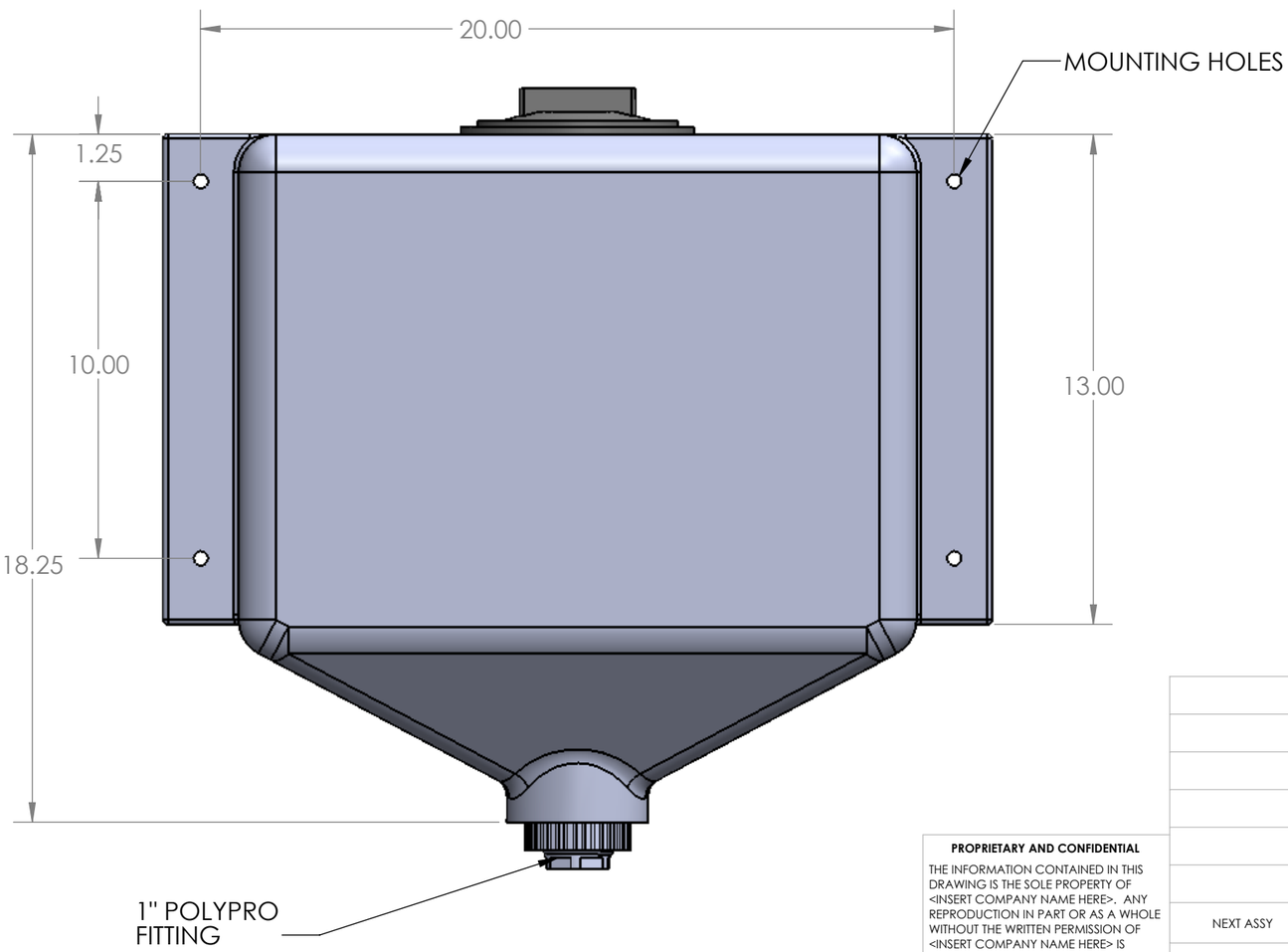

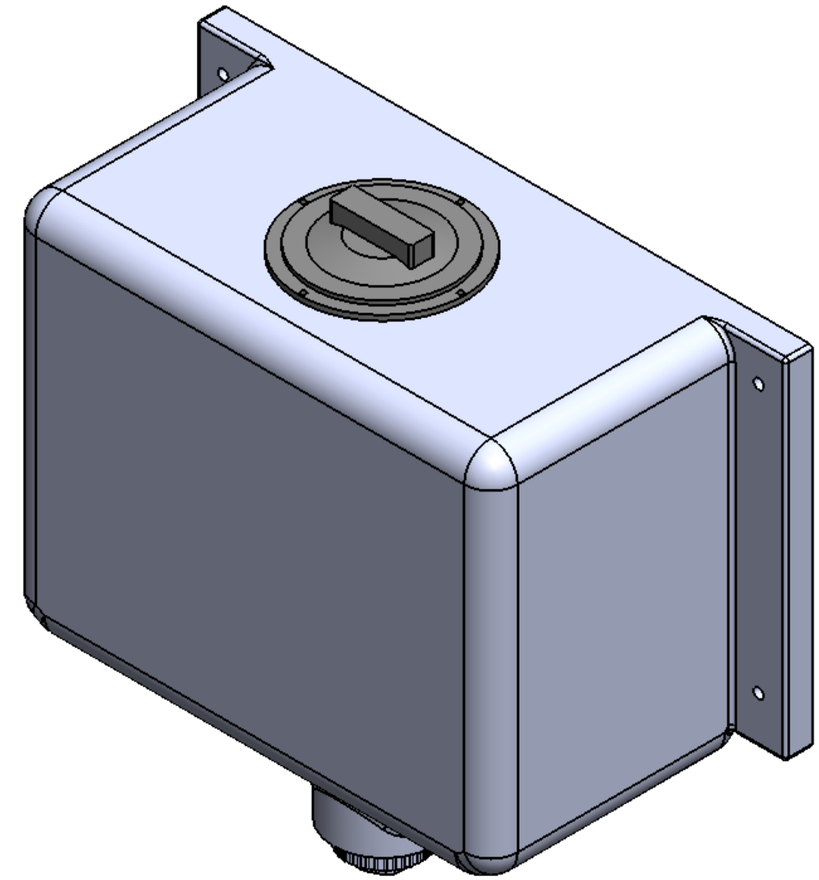

NOTES:

1. MATERIAL: NAT POLYETHYLENE
2. WALL THICKNESS: .18
3. WEIGHT: 7.5 LBS.

PROPRIETARY AND CONFIDENTIAL

THE INFORMATION CONTAINED IN THIS DRAWING IS THE SOLE PROPERTY OF <INSERT COMPANY NAME HERE>. ANY REPRODUCTION IN PART OR AS A WHOLE WITHOUT THE WRITTEN PERMISSION OF <INSERT COMPANY NAME HERE> IS PROHIBITED.

NEXT ASSY	USED ON
APPLICATION	

UNLESS OTHERWISE SPECIFIED:

DIMENSIONS ARE IN INCHES
TOLERANCES:
FRACTIONAL ±
ANGULAR: MACH ± BEND ±
TWO PLACE DECIMAL ±
THREE PLACE DECIMAL ±

INTERPRET GEOMETRIC TOLERANCING PER:

MATERIAL

FINISH

DO NOT SCALE DRAWING

	NAME	DATE
DRAWN	EBW	3-6-13
CHECKED		
ENG APPR.		
MFG APPR.		
Q.A.		

COMMENTS:

GoTo TANKS 877-468-2657

TITLE: 10 GALLON RECTANGULAR CONE TANK

SIZE	DWG. NO.	REV
B	10 RCT	

SCALE: 1:8 WEIGHT: SHEET 1 OF 1